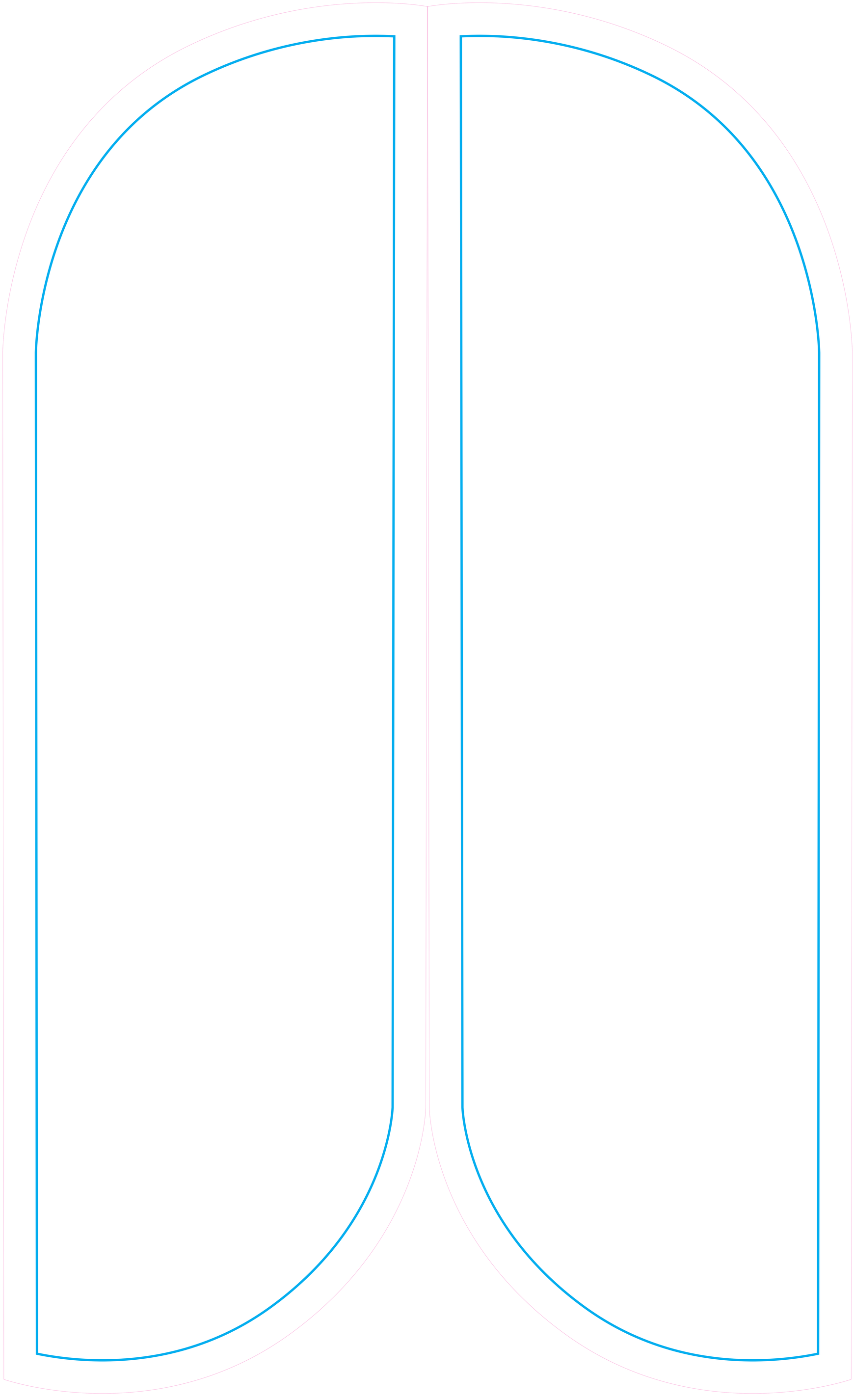

Orange County Designers

## Safe Area

All text and logos need to be inside the safe area.

## Finished Size

This line indicates the final finished size. Use this line to create a clipping path of your final artwork.

## DYE SUBLIMATION PRINTING

We use state-of-the-art full color dye sublimation printers that direct print ink onto the fabric and then infuses with the fabric through a heating procedure. No transfer paper is used which allows us to print faster and with stunning rich results.

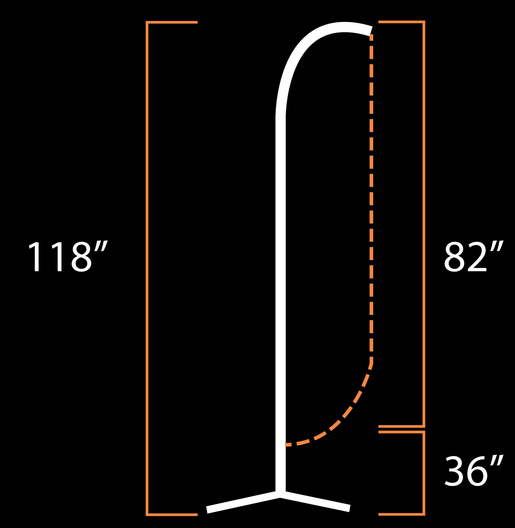


FEATHER FLAG
SMALL - 2 SIDED

- **ALL IMAGES MUST BE EMBEDDED**
- **ALL FONTS MUST BE CONVERTED TO OUTLINES**
- **ARTWORK NEEDS TO BE IN CMYK MODE**

Please note that PMS colors will be converted to CMYK which can cause colors to shift.
If you require color matching, please ask for details on our color matching service.

| VECTOR | IMAGE |
|---|---|
| B B | B |
| LINES IMAGE | RASTER |
| • Adobe IIllustrator : (.ai - .pdf - .eps) | • Adobe Photoshop : (.psd - .tiff - .jpg) |
| • All fonts Outlined | • 200 DPI at 100% Scale |
| • Images Embeded | |